ControlHoist 2.0

OPTIMA

INSTALLATION INSTRUCTIONS
AND
USER GUIDE

ControlHoist Optima

Model COT

Industrial Duty
GEARHEAD DRIVE
Trolley

-NOT FOR RESIDENTIAL USE-
-FOR INDOOR USE ONLY-

IMPORTANT:

PLEASE READ THESE INSTRUCTIONS BEFORE STARTING INSTALLATION. IT IS IMPORTANT THAT THIS OPERATOR BE INSTALLED CORRECTLY IN ORDER TO ACHIEVE SAFE AND PROPER OPERATION.

THIS OPERATOR HAS BEEN SUPPLIED FROM THE FACTORY WITH CONSTANT PRESSURE TO CLOSE. IF OTHER WIRING TYPES ARE REQUIRED, A PHOTO ELECTRIC CONTROL MODEL OSE-S5000 BY VITECTOR FRABA, MODEL HAE00056 BY LINEAR CORP, OR MILLER ELECTRIC REVERSING EDGE MODEL ME WITH BLUE COLOR BAND IS REQUIRED.

SAVE THESE INSTRUCTIONS
INSTALLER: ATTACH THIS BOOKLET TO WALL NEXT TO PUSH BUTTON.

RAYNOR GARAGE DOORS DIXON , ILLINOIS 61021

Rev. 06/15
5973131-1

LIMITED WARRANTY

Raynor warrants the electrical operator and component parts for two (2) years against defects in material and workmanship.

Under the terms of this limited warranty, for any operator components that are found to be defective upon inspection by authorized Raynor personnel, Raynor will, at its option, repair or replace the defective door components. Labor charges for installations or repairs shall be the responsibility of the consumer and must be performed by an authorized Raynor Dealer. **This warranty applies only to doors that are professionally installed by an authorized Raynor Dealer.**

This warranty extends only to the original purchaser. This warranty is not transferable.

This warranty does not apply to any damage or deterioration caused by abuse or failure to provide reasonable and necessary maintenance.

Raynor shall not be liable for any consequential or incidental damages.

ALL OTHER WARRANTIES, EXPRESS OR IMPLIED, INCLUDING ANY WARRANTY OF MERCHANTABILITY, ARE HEREBY EXPRESSLY EXCLUDED.
Some states do not allow the exclusion or limitation of consequential or incidental damages, so the above limitation or exclusion may not apply to you.

Claims for defects in material and workmanship covered by this warranty shall be made in writing with proof of purchase to the dealer from whom the product was purchased or call Raynor at 1-800-4-RAYNOR within the warranty period. Raynor may choose to have the product returned for inspection.
This warranty gives you specific legal rights. You may also have other rights, which may vary from state to state.

SPECIFICATIONS

The Raynor ControlHoist Optima Trolley type electric operator is designed for use on commercial and industrial size sectional overhead doors with a maximum of 24" headroom (30" with extended arm).

HEADROOM REQUIREMENT
A minimum of 4 inches is required above high point of door travel.

BACKROOM REQUIREMENT
Normal headroom-opening height plus 5'-1" clearance back from the header. Low headroom-opening height plus 6'-1" clearance back from the header.

DOOR TYPE
For use on normal and low headroom sectional overhead garage doors.

REDUCTION
Worm gear running in oil bath. 40 to 1 ratio. Output speed is approximately 43 RPM. Secondary reduction is chain and sprocket

DOOR TRAVEL
Operator to move door 8 to 12 inches per second.

FREQUENCY OF OPERATION
Will handle up to 30 cycles per hour or 300 cycles per day.

MOTOR
Continuous duty rated, NEMA "C" faced, 1725 RPM.

CONTROL
24 volt secondary control circuit as standard.

ADJUSTABLE FRICTION CLUTCH
Provided to protect door and operator if door movement is obstructed and prevent serious injuries.

OVERLOAD PROTECTION
Manual reset type for over current protection.

LIMIT SWITCHES
Chain drive, screw type.

IMPORTANT INSTALLATION INSTRUCTIONS

WARNING - Failure to follow these precautions may result in severe personal injury or death.

1) READ AND FOLLOW ALL INSTALLATION INSTRUCTIONS.

2) Door must be properly balanced and free working before installing the operator. Improperly balanced door can be hazardous and cause severe injury. Repairs to cables, spring assemblies and other hardware must be made by qualified door installer.
Operator damage may result if installed on an improperly working door. Safety features of operator will not function properly if door is out of balance.

3) Do not connect to electric power until installation is completed.

4) Remove or make inoperative any locking device unless operator is equipped with door lock interlock feature.

5) Remove all ropes, step plates and lift handles connected to the door before operating the garage door operator.

6) Installation and wiring must conform to local building and electrical codes.

7) Do not operate the transmitter or wall push-button unless the door is in sight.

8) Do not allow children to play with or in the area of the door and controls.

9) Do not place hands in area of pulleys, V-belt, sprockets, chain or rotating shafts.

10) Install warning placard on wall next to push-button.

11) Attach instruction booklet to wall near push-button.

12) Do not attempt to make electrical repairs without shutting off power to the unit.

13) Traffic patterns (vehicular and personnel) should be evaluated and proper safety equipment or push-button wiring installed to prevent damage or injuries.

14) Clutch should be adjusted according to procedure outlined on page 7 and checked periodically

15) Garage doors should *NEVER* be used as pedestrian doors.

16) Install the door operator at least 8 ft (2.44 m) or more above the floor. If the operator must be mounted less than 8 ft (2.44m) above the floor, the exposed moving parts must be protected by covers or guarding. Contact the manufacturer.

17) Verify that all labels for door and operator are in place, see page 16 for proper placement.

18) Install the Entrapment Warning Placard next to control station in a prominent location.

19) Locate the control station: (a) within sight of the door, (b) at a minimum height of 5 feet so small children cannot reach it, and (c) away from all moving parts of the door or operator.

20) For products having a manual release, instruct the end user on the proper operation of the manual release.

PRELIMINARY INSPECTION

Before proceeding with the installation of your Raynor Trolley Operator, it is advisable that you check the following items:

PACKAGING

Check shipping container for damage. Notify delivering carrier immediately.

VISUAL INSPECTION

Visually inspect all parts of the operator for shipping damage.

Check the nameplate located on the powerhead to verify that the correct operator was shipped to you. Also check the power source available and compare it with the electrical data on the nameplate.

ASSEMBLY INSTRUCTIONS

This operator as shipped contains one carton and a rail assembly. The carton contains the powerhead, trolley carriage, door arm, fasteners and miscellaneous parts. The rail assembly includes the roller chain.

RAIL AND CARRIAGE ASSEMBLY

Unpack powerhead and trolley rail assemblies being certain that all loose parts are removed before discarding packing material.

Slide trolley carriage (A), Fig. 1, all the way forward on the rail assembly with lug (B) facing the open end of the rails and within 6" of front mounting bracket.

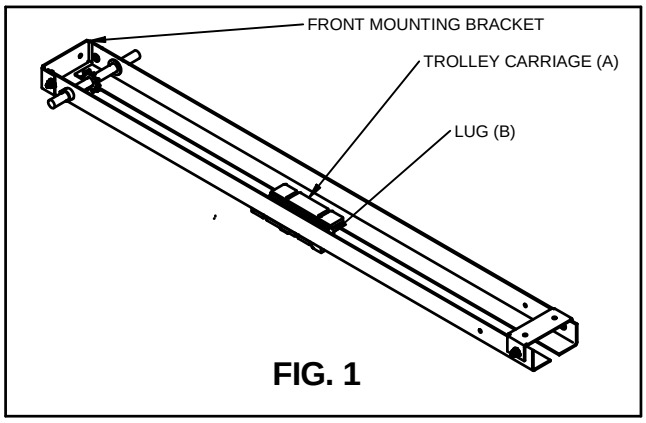

FIG. 1

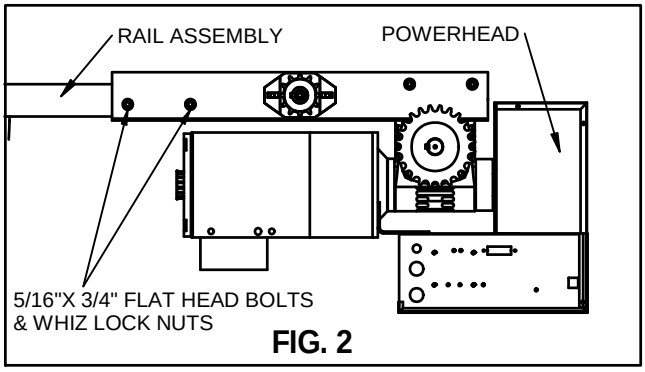

FIG. 2

ATTACH POWERHEAD Fig.2

Bolt powerhead to rail assembly using 5/16 x 3/4 flat-hd bolts and whiz lock nuts furnished in hardware package. Tighten all bolts securely.

ASSEMBLE CHAIN Fig. 3

Apply 3/8" hex nut furnished in hardware package to adjustment rod (C) and install chain around front idler sprocket at front of rail assembly and feed under trolley rail brackets to drive sprocket on powerhead. Feed adjustment rod around drive sprocket then back to trolley carriage. Install lock washer and feed through lug (B) of carriage just far enough to start second nut. Thread other end of chain through chain keeper (E) as shown.

Warning! Improper lead in of chain could cause damage to door, operator or personnel.
Take up slack in chain and tighten cap screw (D). Make final adjustments of chain tension by adjusting nuts on rod (C).

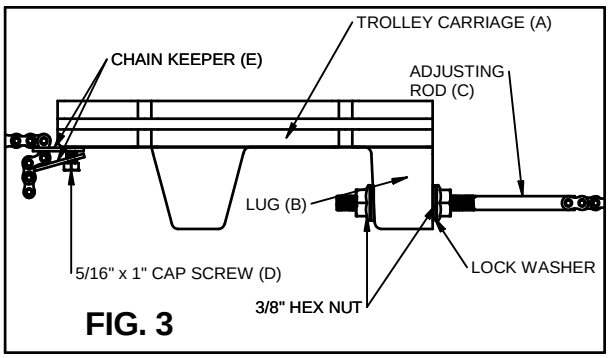

FIG. 3

INSTALLATION INSTRUCTIONS

Many of the problems related to electric operators are due to improper installation. The following installation procedures are recommended to minimize these problems.

INSTALL FRONT MOUNTING BRACKET

Begin installation with door in closed position.

Measure width of door to find exact center and mark centerline on header. Extend centerline above spring assembly.

Locate high rise point of door, Fig. 4, and use level to mark high point on header as shown.

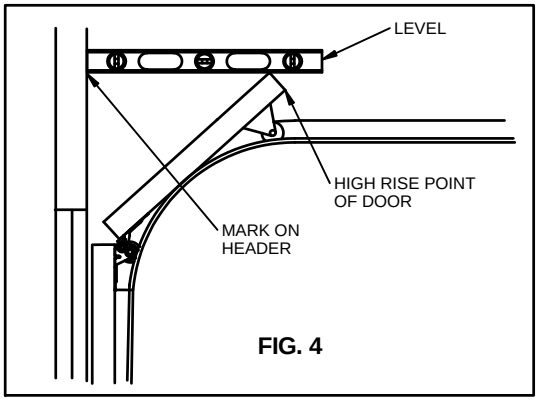

FIG. 4

Remove front mounting bracket (See Fig. 1) from rail assembly and install on front wall above spring assembly, Fig. 5. If headroom permits, bottom edge of bracket should be 2 inches above high rise point marked on header. Secure bracket to wall using either lag screws or self tapping screws furnished in hardware package.

Warning: Be certain mounting bracket is level and mounting pad is secure

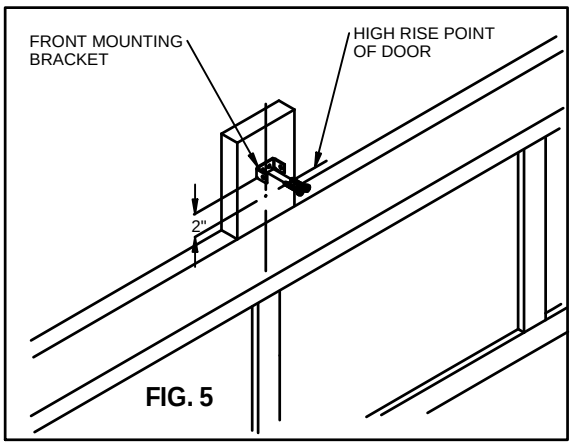

FIG. 5

HANGING OPERATOR Fig. 6

Resting powerhead of operator on floor, attach front end of rails to front mounting bracket. Swing unit into position over door and temporarily hang powerhead end with strong rope or place on tall ladder. Rear of operator should be as low as possible and still allow door to clear rail assembly. **Note:** If rear of operator is mounted too high, permanent damage to door could result.

With operator in desired position, cut angle iron hangers and secure operator at rear.

Caution: Raynor recommends a center support hanger on all installations over 10 feet high.

With hangers in place, tighten all bracket bolts. Remove temporary hanger or ladder.

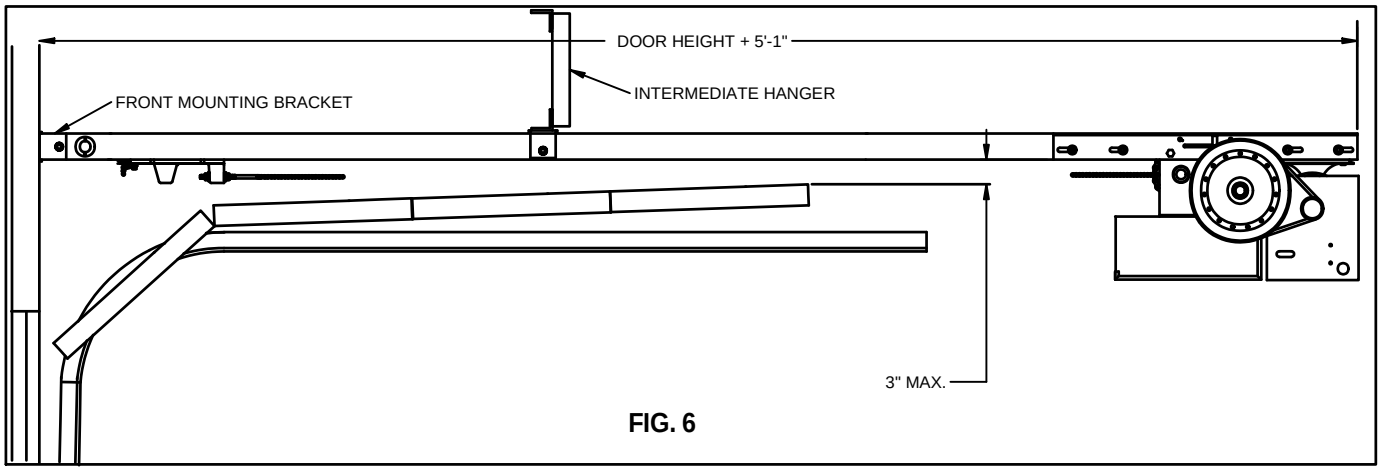

FIG. 6

ATTACH DOOR BRACKET

Most installations will require additional bracing where door bracket is bolted to door. Fig. 7 shows the type of bracing recommended by Raynor for the Trolley Operator. Bracket should be located so holes on door bracket line up with top rollers on door.

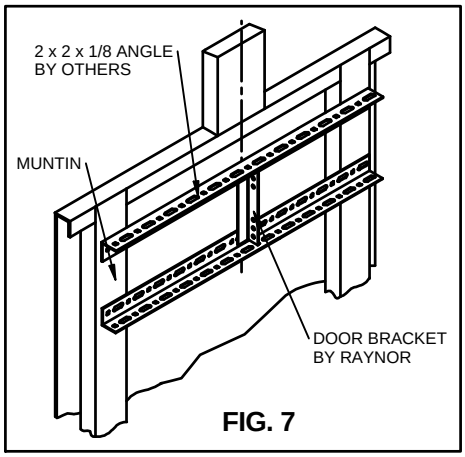

FIG. 7

ATTACH DRAWBAR Fig. 8

Move trolley carriage to within 6" of front mounting bracket if operator is supplied with a brake, pull disconnect.

Attach quick release arm to trolley carriage. With quick release arm in vertical position, attach curved portion of arm assembly to quick release portion using 5/16 x 1" cap screws, nuts and lock washers furnished in hardware package.

With door in fully closed position attach remaining end of arm assembly to door bracket with 3/8 x 1" cap screw, washers and nuts furnished. Arm should connect to door bracket at hole nearest in line with top rollers of door. See Fig. 8

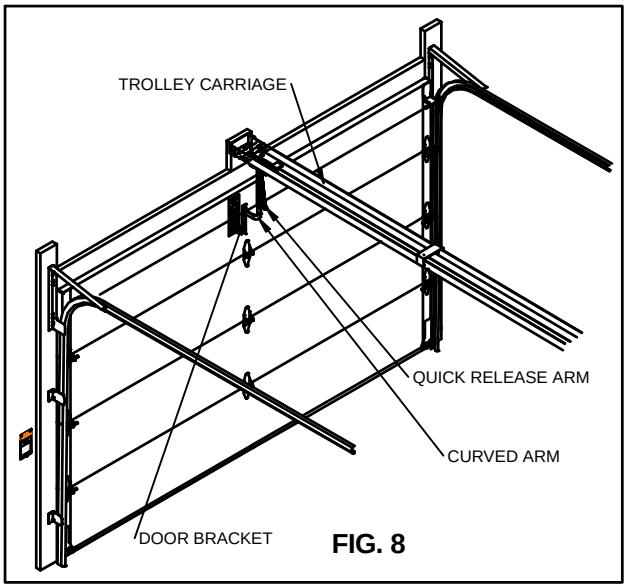

FIG. 8

CONNECT THREE BUTTON STATION

Your operator has been supplied with a standard three button station labeled open-close-stop. Mount three button station in sight of the door, at a minimum height of 5 feet and away from moving parts of the door. For proper connection of the three button station refer to wiring diagram in lid of operator. **At this time also mount warning placard supplied in hardware box next to three button station.**

CONNECT ENTRAPMENT DEVICE

If other than constant pressure wiring type is required, you must connect a photo electric control series 5000 by Vitector Fraba, model HAE00056 by Linear Corp., or Miller Electric reversing edge model ME with blue color band. For proper connection of device, refer to wiring diagram found in lid of operator.

Monitored Reversing Devices		
Configuration:	**Connect to Sensor 1 Input**	**Connect to Sensor 2 Input**
Electric Edge Only	X	-
Photo Eye Only	X	-
Photo Eye & Electric Edge	Photo Eye	Electric Edge
Photo Eye & Photo Eye	Photo Eye 1	Photo Eye 2

WARNING: Failure to connect a Raynor approved reversing device may cause severe injury or death.

WARNING: Do not let children operate the door or play in the door area. Keep clear of the door it may move at any time without warning and keep door in sight at all times when it is moving.

CONNECT TO POWER SUPPLY

WARNING: Before beginning any electrical hook-up, disconnect quick release arm from operator using quick release mechanism shown in Fig. 8. Use caution when releasing trolley arm, it will swing downward.

Consult local wiring codes prior to permanent installation. This operator must be properly grounded. Refer to wiring diagram, found on inside of control box cover, for power line, push-button, and reversing device connections.

Verify that line voltage and operator voltage shown on the cover are the same.

Three Phase Power: On units requiring three phase power, be certain motor rotates in proper direction. Limit switches will not function if motor rotation is incorrect. To change motor rotation, reverse any two of the three incoming power leads.

MINIMUM WIRE SIZE FOR SINGLE-PHASE MOTORS

Hp	Volts	0-25 Ft.	50 Ft.	100 Ft.	150 Ft.	200 Ft.
	115	14	12	10	8	6
0.5	230	14	14	14	14	12
	115	12	10	8	6	4
0.75	230	14	14	14	12	10
	115	12	10	8	6	4
1	230	14	14	14	12	10
1.5	230	14	14	12	10	8

MINIMUM WIRE SIZE FOR THREE-PHASE MOTORS

Hp	Volts	0-25 Ft.	50 Ft.	100 Ft.	150 Ft.	200 Ft.
	230	14	14	14	14	14
0.5	460	14	14	14	14	14
	230	14	14	14	14	14
0.75	460	14	14	14	14	14
	230	14	14	14	14	14
1	460	14	14	14	14	14
	230	14	14	14	14	12
1.5	460	14	14	14	14	14
	230	14	14	14	12	12
2	460	14	14	14	14	14

LIMIT ADJUSTMENT and TESTING OF OPERATOR

WARNING: To avoid serious injury or death always disconnect electrical power before adjusting limit switches.

This operator has been supplied from the factory with constant pressure to close. It is advisable that you test the operator and set limit switches in this mode. With quick release arm still disconnected, turn power on to operator and press open button. This insures that the operator is running in the correct direction. Press Stop button after unit has run a few feet, then close the operator so the trolley carriage is within 6" of front mounting bracket and attach quick release arm to trolley carriage. Set close limit at this position by depressing limit nut keeper and turning nut towards the close limit switch (see Fig. 9) until limit switch is activated (clicks). **Note:** In certain applications the limit switches may be reversed from what is shown. At this time the clutch must be adjusted, see clutch adjustment.

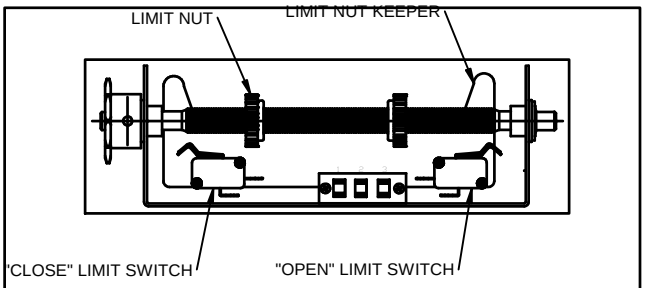

FIG. 9

When clutch is properly adjusted, raise door to the full open position and stop door at the desired height and set the open limit nut as described above. After setting limit nuts in desired position, make certain that limit nut keeper is engaged in grooves on limit nuts. When making fine adjustments, turn nut no more than 1/4 turn at a time. To stop door earlier, move limit nut closer to limit switch. To stop door later, move nut away from limit switch.

CLUTCH ADJUSTMENT

DANGER: To avoid serious injury or death always disconnect electrical power before adjusting clutch.

WARNING: Do NOT over tension the clutch. The clutch must slip to prevent door damage or injury if the door hits an obstruction while moving.

Note: The clutch is set loose at the factory and must be adjusted in the field for proper sensitivity.

To adjust clutch sensitivity, loosen setscrew on jamb nut and adjust finger tight. Tighten jamb nut approximately 1/8 turn and secure set screw to shaft. Continue this process until proper adjustment is achieved. Do not over tighten set screw nor completely flatten the belleville springs (See Fig. 10). If additional tension is required, add extra belleville springs to clutch assembly.

Caution: If clutch does not slip, cables will unwind from drum and cause door to drop when obstruction is removed

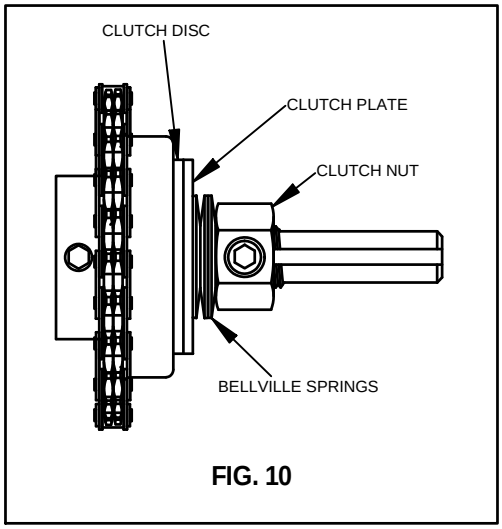

FIG. 10

VENT PLUGS

A Vent plug is supplied and should be field installed. This will help to prevent buildup of extreme pressures inside gearbox which could cause oil leakage. Vent plug must be mounted in one of the plugs that is above the oil level to prevent leakage.

LOGIC BOARD FUNCTIONS AND CONNECTIONS

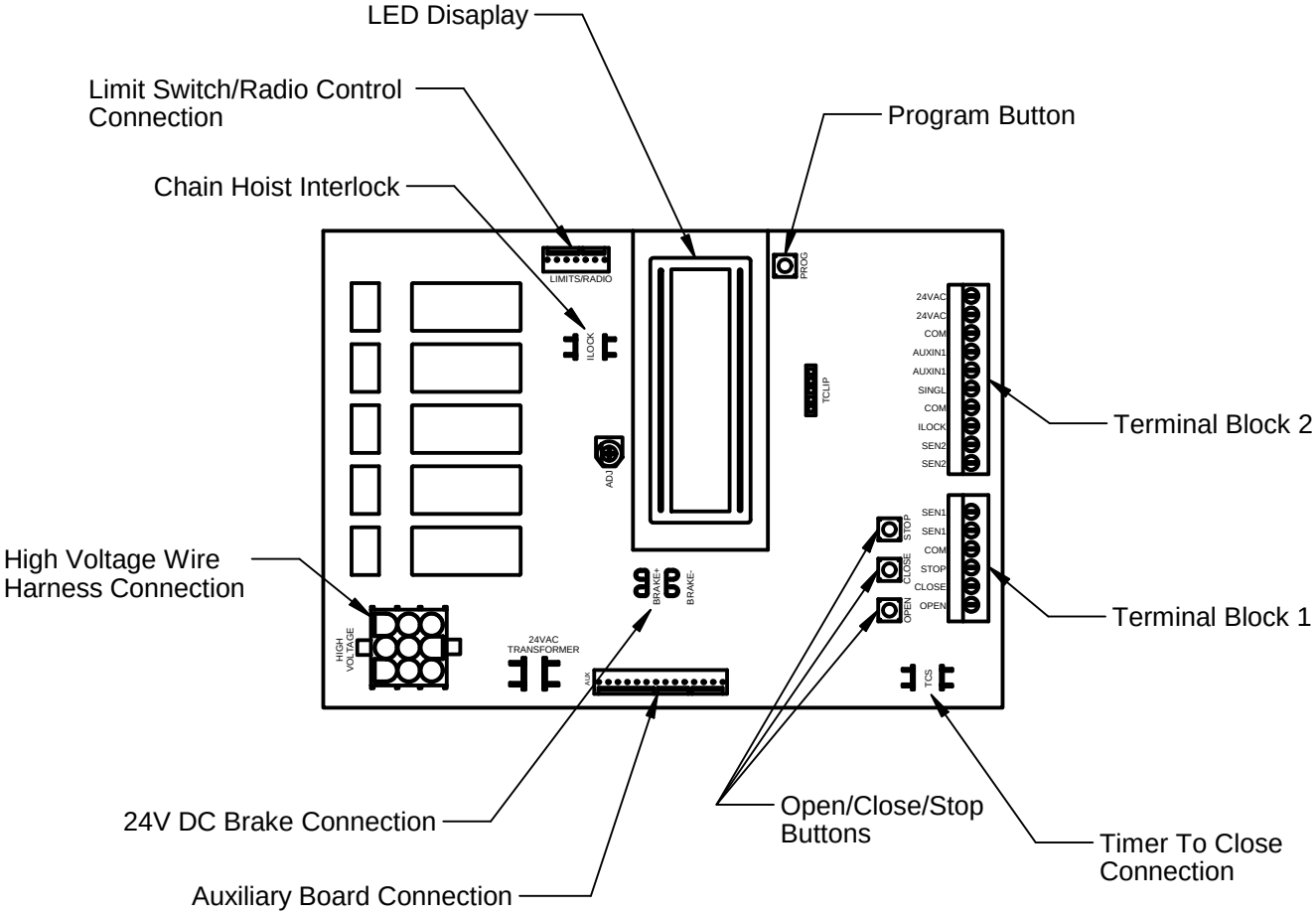

FIGURE 11

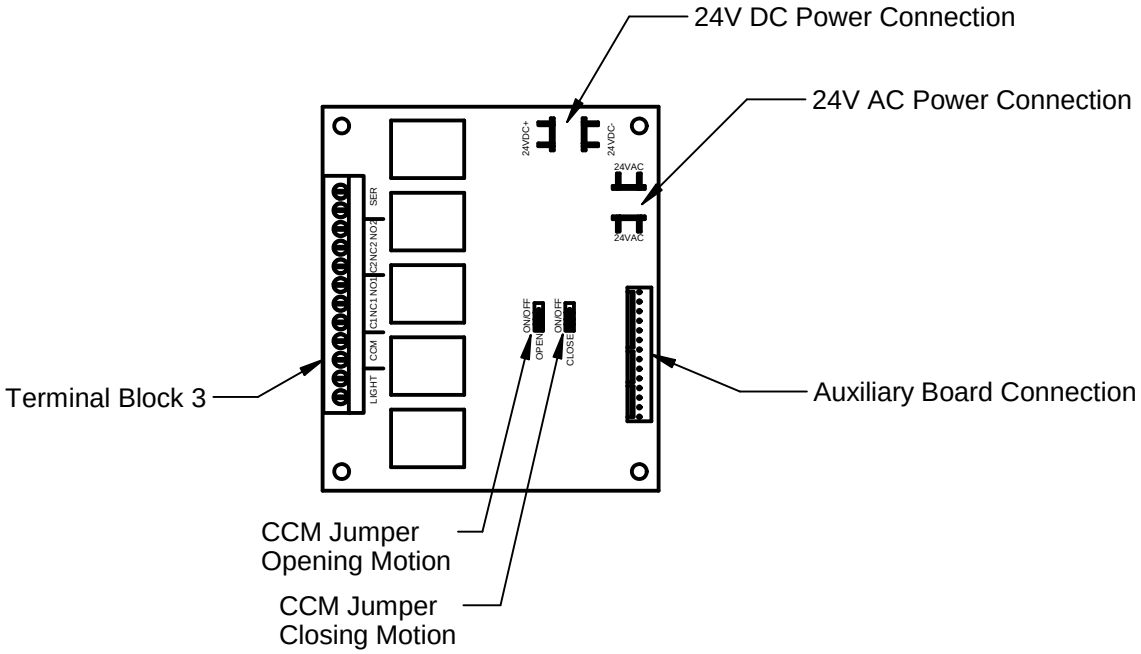

AUXILIARY BOARD (OPTIONAL)

FIGURE 12

LOGIC BOARD PROGRAMMING

The logic board may be factory programmed, if not follow the instructions below.

Programming Notes:

1. Use the Open, Close and Stop buttons on the board when programming.
2. **Open button** used to **increase time** or turn functions '**On**' & '**Off**'.
3. **Close button** used to **decrease time** or **page** through choices.
4. **Stop button** used to **continue** to next option and **end** programming.

1. To start the program mode, locate the program and stop button on the logic board (see figures 11 & 12), press and hold both program and stop buttons for 5 seconds.

2. "**WIRING MODE**" will display, there are three options to choose from as shown below.

   NORMAL SR5 - 3 button momentary contact on open, close, and stop with 1 second delay on open and close with provisions for connection of a reversing device(s).

   CSTP OPN/CLS RD - Constant pressure to open and close.

   CSTP CLS ONLY RC - 3 button momentary contact on open and stop, constant pressure to close.

3. Select the wiring type by using the **close button** to page through the wiring modes. Press the **stop button** to **continue** to the next option.

4. "**SENSOR 1 TYPE**" will display, there are two options to choose from, "**PHOTO EYE**" or "**ELECTRIC EDGE**". Use the **close button** to page through the choices. Press the **stop button** to **continue** to the next option.

   Note: The photo eye or an electric edge must be monitored.

5. "**SENSOR 2 TYPE**" will display, there are three options, "**NONE CONNECTED**", "**PHOTO EYE**", or "**ELECTRIC EDGE**". Use the **close button** to page through the choices. Press the **stop button** to **continue** to next option.

   Note: The photo eye or an electric edge must be monitored.

6. "**TIMER TO CLOSE**", this will display if there is a timer to close connected to the logic board. The timer to close can be set from 10 seconds to 240 seconds in 1 second intervals. Use the open and close buttons on the board to set the time. Press the **stop button** to **continue** to the next option.

7. "**AUX INPUT 1 TYPE**" will display. This is an auxiliary contact used to open the door. There are five options to choose from as shown below. Use the **close button** to page through the choices. Press the **stop button** to **continue** to next option.

   NONE CONNECTED - No device required

   REVERSING (N.C.) - Non-monitored, normally closed reversing device.

   REVERSING (N.O.) - Non-monitored, normally open reversing device.

   VENTILATION (N.O.) - Normally open contact used to open the door for ventalation such as a carbon monoxide detector. The door can be opened to a determined height by setting the open run time.

   FIRE STATION (N.O.) - Normally open contact used to open the door such as a pull cord. The door will fully open and then close after a determined time has been set.

8. If "**VENTILATION (N.O)**" was selected, the distance the door is to open needs to be set. The display should read "**OPEN VENT TIME**" , the distance is determined by the number of seconds the door will open. This is done in 1 second intervals from 3 to 30 seconds. Use the open and close buttons on the board to set the time. Press the **stop button** to **continue** to the next option.

9. If "**FIRE STATION (N.O)**" was selected, the timer to close needs to be set. "**FS: TIME TO CLOSE**" will display. This is done in 10 second intervals from 60 to 900 seconds. Use the open and close buttons on the board to set the time. Press the **stop button** to **continue** to the next option.

10. "**AUX INPUT 2 TYPE**" will display, this is used for a second auxiliary contact to open or close the door. Repeat steps 7 through 9 if a second auxiliary contact is required.

11. "**MIDWAY STOP**", this allows the door to stop midway through the open cycle. If a midway stop is not required, select "**OFF**". If the midway stop is required, select "**ON**". Press the **stop button** to **continue**.

12. If a midway stop is requried, "**MIDWAY TIME**" will display, the distance is determined by the number of seconds the door will open. This is done in 1 second intervals from 3 to 30 seconds. Use the open and close buttons on the board to set the time. Press the **stop button** to **continue** to the next option.

13. If there is no auxiliary board, then programming the logic board is complete. If there is an auxiliary board, then continue through steps 14 - 16.

14. "**LIGHT ON TIME**" will display, this is used to turn on a light and shut off a light after a determined amount of time. This is done in 10 second intervals from 10 to 240 seconds. Use the open and close buttons on the board to set the time. Press the **stop button** to **continue** to the next option.

15. "**CLOSE WARNING LIGHT**" will display, this is used to activate a warning light a determined amount of time before the door goes in the close motion. If no warning light is required, select "**OFF**". If a warning light is required, select "**ON**". Press the **stop button** to **continue**.

16. If a warning light is "**ON**", "**WARNING TIME**" will display. The time is set in 1 second intervals from 3 seconds to 10 seconds. If there is a timer to close, the close warning light time must be set lower than the timer to close time. Use the open and close buttons on the board to set the time. Press the **stop button** to **end** programing.

SPECIAL PROGRAMMING INSTRUCTIONS

The maximum run timer and reverse limits option are factory set and you are not required to set these in the initial set up. However, in the event that you need to modify either one of these options, use the instructions below.

Maximum Run Timer

To help prevent damage to the operator, it is supplied with a maximum run timer (factory set at 40 seconds) with a maximum run time of 120 seconds.

To change factory default, press and hold the stop button and program button until you enter the programing mode. Once in the program, release both buttons. Then press and hold the program button for approximately 30 seconds, or until an asterisk shows up on the screen. Then release the program button. You can now use the stop button to advance through the program until you see the maximum run timer. Use the open and close buttons to adjust the time. Once finished, use the stop button to advance the rest of the way through the program.

Reverse Limits

For ease of changing the operator position, it has been supplied with a “reverse limits” option. If you need to switch the open and close limit switches, press and hold the stop button and program button until you enter the programming mode. Once in the program, release both buttons. Then press and hold the program button for approximately 30 seconds, or until an asterisk shows up on the screen. Then release the program button. You can now use the stop button to advance through the program until you see the reverse limits option. Use the open and close buttons to select “yes” or “no” (factory default is “no”). Once finished, use the stop button to advance the rest of the way through the program.

USER AND IMPORTANT SAFETY INSTRUCTIONS
WARNING - To reduce the risk of severe injury or death:

1. READ AND FOLLOW ALL INSTRUCTIONS.
2. Never let children operate or play with door controls. Keep the remote control (where provided) away from children.
3. Personnel should keep away from a door in motion and keep the moving door in sight until it is completely closed or opened. NO ONE SHOULD CROSS THE PATH OF A MOVING DOOR.
4. Test the doors reversing features at least once a month per instructions supplied with reversing device. If limit switches require adjusting, reversing devices must also be re-tested. Failure to adjust the operator properly, may cause severe injury or death.
5. For products having a manual release, if possible, use the manual release only when the door is closed. Use caution when using this release when the door is in the open position. Weak or broken springs may cause the door to fall rapidly, causing severe injury or death.
6. KEEP DOORS PROPERLY OPERATING AND BALANCED. See Door Manufacturer's Owner's Manual. An improperly operating or balanced door could cause severe injury or death. Only have a trained door systems technician make repairs to cables, springs and other hardware.
7. Only use Raynor approved reversing device as explained on front cover of this installation booklet. Failure to use a Raynor approved device may cause severe injury or death.
8. SAVE THESE INSTRUCTIONS.

OPERATING INSTRUCTIONS:

Operating the 3-Button Control Station:

1. Press OPEN button (*The door should move in the open direction*).
2. Press STOP button (*The door should stop*).
3. Press the CLOSE button (*The door should move in the close direction*).
4. Release the close button and the door should stop if set up for constant pressure (*The door should continue if set up for momentary contact*).
5. Press stop button (*The dooor should stop*).

How to verify limit switches are adjusted properly:

1. Press open button and allow door to fully open. The limit should be adjusted so that bottom of door is about an inch above the bottom of the header.
2. Press close button and allow door to fully close. The door should just hit the floor and stop. If close limit is set to low, the door may hit floor and bounce back up. This can cause damage to door and operator. If door does not completely seal against floor, the problem may be with the floor being un-even and not a problem with the operator.

If the limits are not set properly, and need adjustment, remove power and adjust limits (Refer to page 7).

TEST THE ENTRAPMENT PROTECTION DEVICES:

1. Open the door.
2. Place an obstruction in the path of the photo eyes or electric sensing edge.
3. Press the CLOSE button. The door should not close if photo eyes are installed. The door should close to obstruction and reverse if sensing edge is installed.
4. Remove the obstruction.
5. Press CLOSE button. The door should close.

If door did NOT reverse from obstruction, check entrapment devices.

PERIODIC INSPECTION AND MAINTENANCE

Your Raynor electric door operator was designed to give dependable service with a minimum amount of maintenance. After proper installation and adjustment, by a qualified installer, little is required in the way of miantenance except for periodic inspection and lubrication as follows:

LUBRICATION

The gearbox is supplied from the factory with oil for a temperature range of -20° to 90°F. For special conditioins or if oil needs to be added, follow the recommendations below:

AMBIENT TEMPERATURE	MOBIL OIL	HUMBLE	IMPERIAL OIL AND GREASE
-20°F to 10°F	Vactra Oil No. 2	Spartan EP-2	Molub-Alloy 804
10°to 40°F	Vactra Oil No. 4	Spartan EP-2	Molub-Alloy 80
40°to 75°F	Mobilgear 632	Spartan EP-4	Molub-Alloy 90
75°to 105°F	*600 W Super Cylinder Oil	Spartan EP-6	Molub-Alloy 140

Note: Some gear lubricants contain corrosive extreme pressure additives. Do not use lubricants that are compounded with sulphur and/or chlorine. These may be corrosive to bronze worm gears.

All Raynor operators are supplied with continuous rated motors and under normal conditions require no oiling.

Lubricate rails with paraffin or graphite. Do not use oil or grease on trolley drive chain or rails as it could drip onto door.

INSPECTION AND ADJUSTMENTS

WARNING: Repairs and adjustments to the door or operator should only be made by a qualified door installer.

1. Inspect and tighten (if necessary) all bolts and nuts.

2. Periodically check that all labels shown on page 13 are installed. If labels are missing, contact your nearest Raynor dealer.

3. Adjust chain tension on trolley carriage (see Fig. 3). This chain could stretch slightly during first year of operation.

4. Adjust clutch as shown in Fig. 10, if necessary. Adjustment may be required after a short break-in period.

5. If necessary, adjust limit nuts as described in Fig. 9.

6. Check manual operation of door. Refer to installation instructions 800, page 5972558-1 for guidelines.

7. Test all reversing devices once a month for proper operation.

8. Test all options that may have been supplied with the operator to insure they are working properly.

CAUTION:Do not reset overload until problem is identified. Damage to door and operator or personal injury could result if cause of tripping is not corrected.

9. Manual Reset Overload: The overload is properly sized, at the factory, for normal door operation. If overload trips, manually check mechanical operation of door and operator to be certain both work freely.

Single Phase: When overload trips, it cuts power to the entire unit. To reset, press reset button on outside of control box.

Three Phase: When overload trips, it cuts power to the 24 volt control circuit only. To reset, open control box cover and press red reset button.

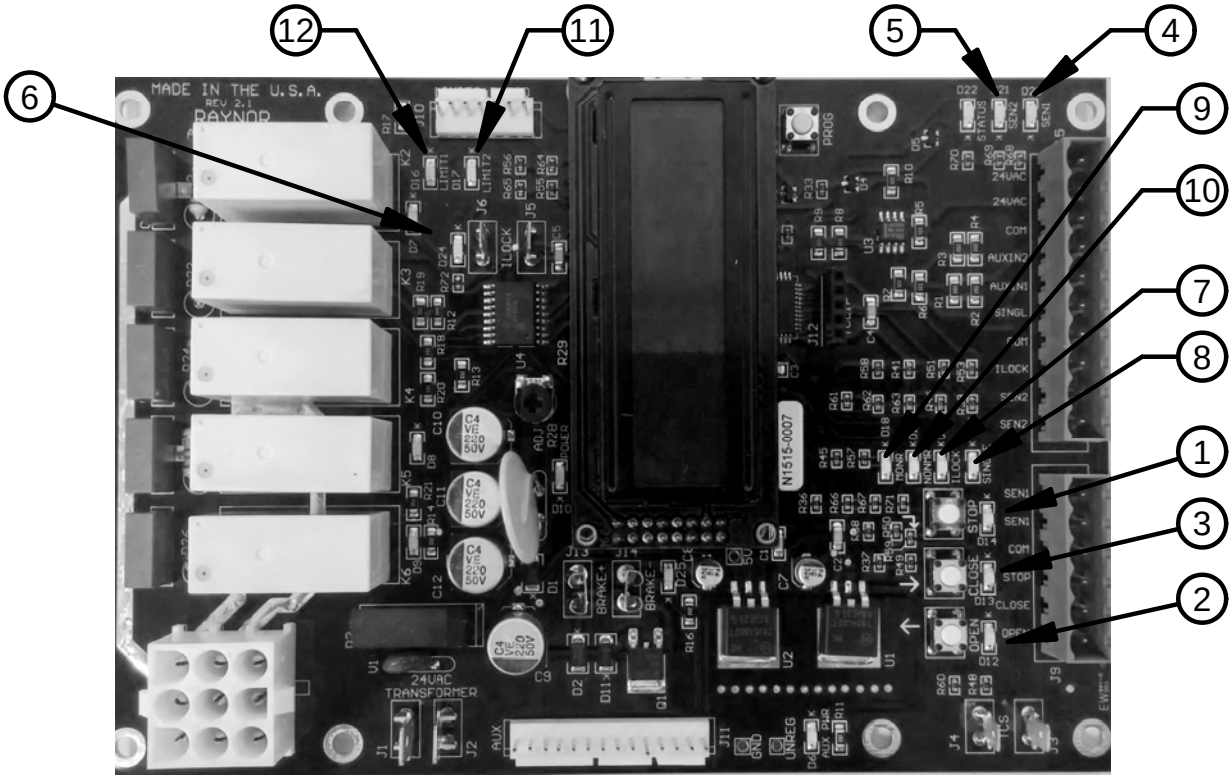

ON BOARD STATUS LIGHTS

Status Light	Definition
1. Stop (D14)	On = Stop button connected and working. Off = Stop button pressed or NOT connected.
2. Open (D12)	On = Open button sending signal (pressed) Off = Open button is not sending signal.
3. Close (D13)	On= Close button sending signal (pressed) Off = Close button is not sending signal.
4. Sen 1 (D20)	On = Sensor 1 hooked up & working Off = Sensor 1 activated, or has malfunctioned.
5. Sen 2 (D21)	On = Sensor 2 hooked up & working/ or sensor 2 not programed. Off = Sensor 2 activated, or has malfunctioned.
6. I-Lock (D24)	On = Chain hoist interlock circuit is open. (chain hoist is pulled, malfunctioned, or jumper is missing for non-chain hoist units) Off = Chain hoist circuit is closed. (normal operation)
7. I-Lock (D23)	On = Lock interlock circuit on TB-2 is open. (Jumper is missing or interlock circuit has malfunctioned) Off = Lock interlock circuit on TB-2 is closed. (normal operation)
8. Single (D15)	On = Single button activated. Off = Single button not activated.
9. Non -Monitored (D18) Aux Input 2	On = Non monitored circuit is closed. Off = Non monitored circuit is open.
10. Non-Monitored (D19) Aux Input 1	On = Non monitored circuit is closed. Off = Non monitored circuit is open.
11. Limit 1 - Open (D16)	On = Limit switch is activated. Off = Limit switch is not activated.
12. Limit 2 - Close (D17)	On = Limit switch is activated. Off = Limit switch is not activated.

LCD Display Messages

Display	Definition
"Locked Out"	The LCD display will read "locked Out" when either the on board chain hoist interlock, or the door interlock, on terminal block 2 is activated. These connections will have a jumper when not required.
"TCS Paused"	When in Timer to close mode (TCS), and door is in the open position, if the stop button is pressed while timer is still counting down it will pause the timer until either the open or close button is pressed.
"Lock Bar Detected"	This message will display whenever the open button is pressed and the limit nut does NOT come off the close limit switch with in a certain amount of time. If the door is stuck down for any reason, the open cycle will shut down to save damage to the door.
"Close in XX sec."	When in timer to close mode, and the door is in the open position, the display will read the amount of time in seconds that is remaining until door closes. You can activate the stop button to pause this countdown.
"Sensor 1 activated"	This message will display anytime the board is not receiving a signal from the sensor 1, when close button is pressed. Whether it is not connected, activated, or has malfunctioned.
"Sensor 2 activated"	This message will display anytime the board is not receiving a signal from the sensor 2, when close button is pressed. Whether it is not connected, activated, or has malfunctioned. If no sensor is required on sensor 2, select "None Connected" in the program.
"Aux 1 activated"	This message will display anytime the board is not receiving a signal from the Aux 1 when close button is pressed. Whether it is not connected, activated, or has malfunctioned. If no sensor is required on Aux 1, select "None Connected" in the program.
"Aux 2 activated"	This message will display anytime the board is not receiving a signal from the Aux 2 when close button is pressed. Whether it is not connected, activated, or has malfunctioned. If no sensor is required on Aux 2, select "None Connected" in the program menu.
"At Open Limit"	This message will display anytime the board is receiving a signal from the open limit switch and the open button is pushed.
"At Close Limit"	This message will display anytime the board is receiving a signal from the close limit switch and the open button is pushed.
"Aux Board Connected"	This message will display when the operator is powered up, and the auxiliary contacts board is connected to the main board via wiring harness.
"Partially Open"	This message will display anytime the door is not on the fully open or close limit switch.
"Opening Door Running"	This message will display when the door is running in the open direction.
"Closing Door Running"	This message will display when the door is running in the closed direction.

COMMERCIAL OPERATOR TROUBLESHOOTONG LIST

SYMPTOM	PROBABLE CAUSE	PROBABLE SOLUTION
1. The operator will NOT respond to any commands.	1. No Power to Operator	1. Connect Operator to power source.
		2. Check voltage at L1 & L2 for single phase and L1, L2, & L3 for three phase. 3. Check for blown fuse or tripped circuit breaker.
	2. Overload protector tripped in operator.	1. Reset and check for cause. Externally located on single phase and internally located on three phase.
	3. Display on Logic board reads "Locked Out"	1. Chain Hoist interlock switch is activated or has malfunctioned, or the jumper is missing on non chain hoist units. ("Logic board functions & connections" page.)
		2. Interlock device on Terminal Block 2 has malfunctioned or jumper missing. ("Logic board functions & connections" page.)
2. Operator only works with constant pressure on close button.	1. Reversing device not hooked up, or not working properly.	1. See wiring diagram for proper connection of reversing devices.
	2. Wiring mode set for RC or RD wiring.	1. Set wiring mode to SR5 momentary operation. See "Logic Board Programing" page.
	3. Reversing device is activated.	1. Remove obstruction.
	4. Improper programing of reversing device.	1. Make sure the logic board is programed for the correct reversing device. If using a photo eye, make sure the program is set for photo eye. Same goes for a electric edge. See "Logic Board Programing" page.
3. Radio control will not work.	1. Weak battery.	1. Replace battery.
	2. Incorrect hook up.	1. Refer to wiring diagram for proper connection.
4. Operator does NOT shut off at fully open or closed position.	1. Limit nuts not properly adjusted.	1. See limit switch adjustment in installation instructions.
	2. Limit drive chain is broken or inoperative.	1. Replace chain, check drive mechanism, and re-adjust limit switches.
	3. Limit switch is damaged.	1. Check limit switch operation and replace if necessary.
5. Door closes when open button is pressed and door opens when close button is pressed.	1. Three phase power supply is connected out of phase.	1. Interchange any two incoming power supply leads.
	2. Open & close buttons not wired correctly.	1. Refer to wiring diagram for proper connection.
6. Door will open most of the way, but stops short of fully open and open button must be pressed again the fully open the door.	1. Maximum run timer has timed out. The default setting is 40 seconds. For larger doors, maximum run time may need to be set higher.	1. See intructions for setting of Maximum run timer.
7. There is a delay between when open or closed button is pressed, and door begins to move.	1. This is normal operation. This delay is in place to keep door from reversing instantly and eliminate stress on rollers and cables.	1. Normal operation, no solution.
8. Sensors are ligned up but still not sending signal to the logic board.	1. Sunlight is blocking the receiving photo eye.	1. Move photo eye's away from opening, or swap the reciever and transmitter to keep reciever out of the sunlight.
	2. Faulty photo eye's	1. Replace photo eye's.

LABEL PLACEMENT FOR TROLLEY OPERATORS

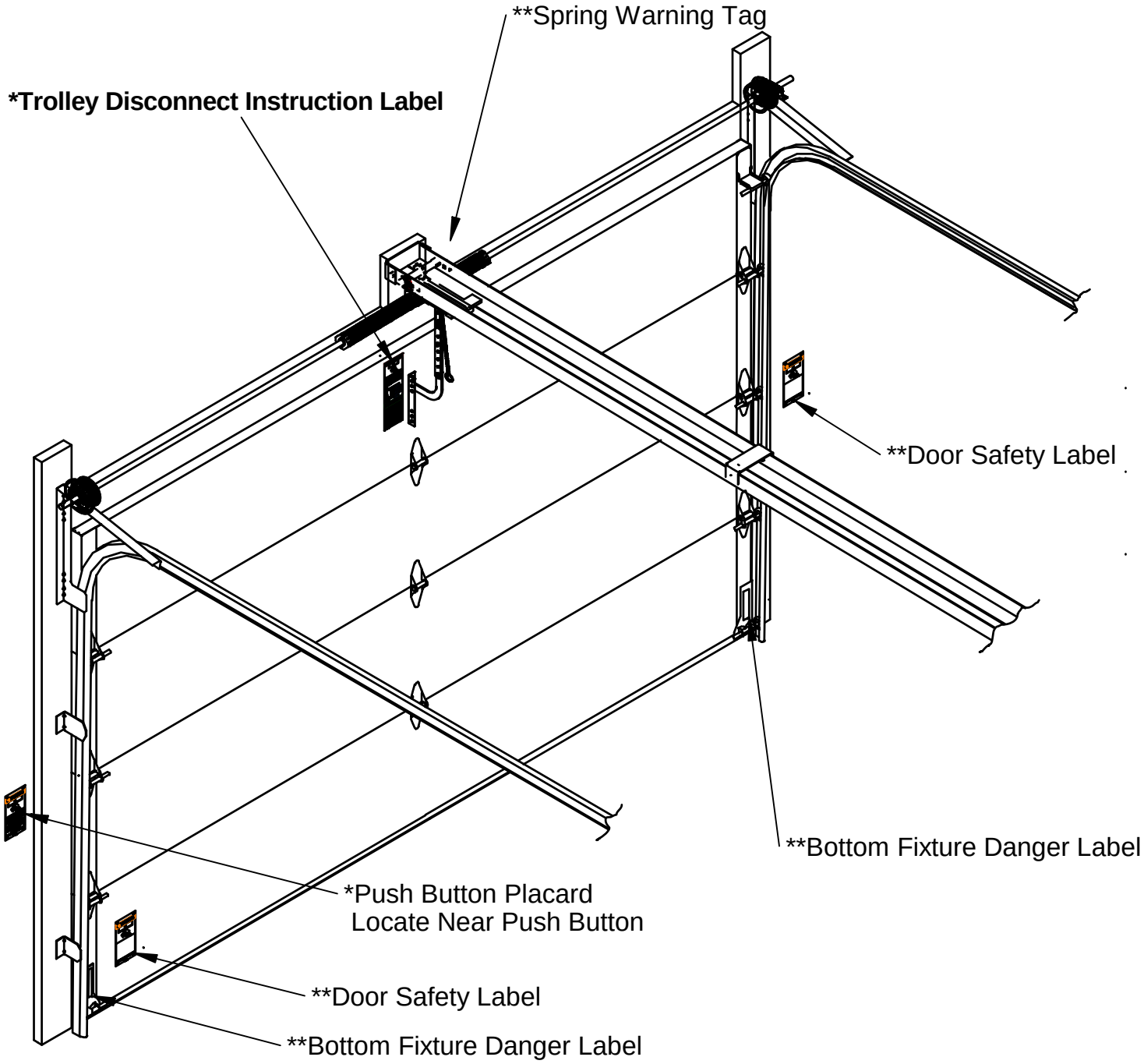

* Label Supplied With Operator
** Label Supplied With Raynor Door

NOTE: Placement of Labels may vary from what is shown.